Copenhagen Bath
Roskildevej 394
DK-2610 Rødovre
VAT no.: DK32648622
Phone: 02476468850
contact@copenhagenbath.co.uk
www.copenhagenbath.co.uk

Christiansfeld 30 basin

SKU: 40010052

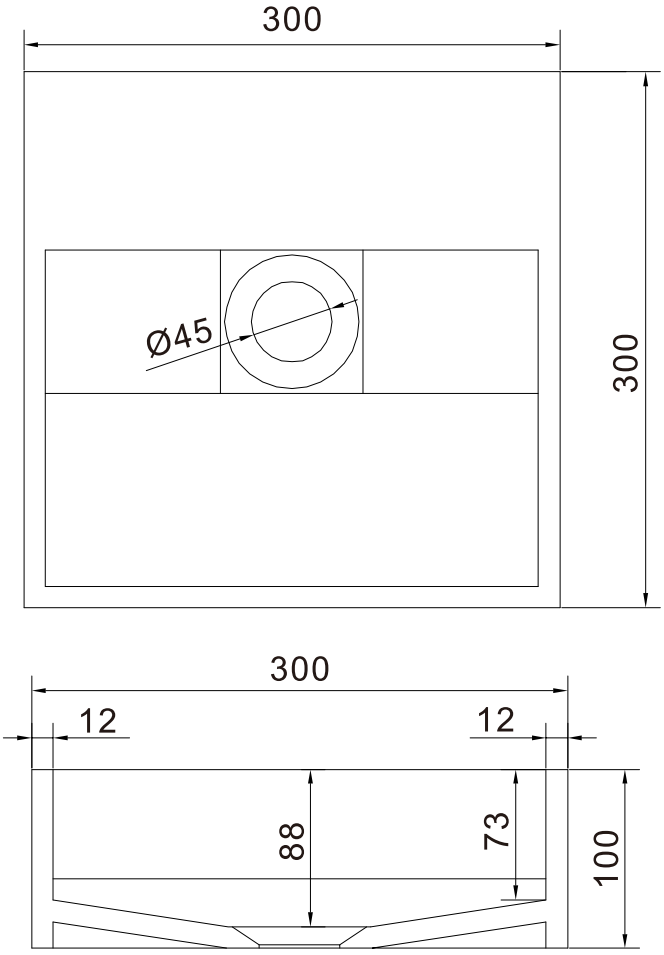

Colour:	Matte white
Size H/L/D:	10cm / 30cm / 30cm
Weight:	5.5kg net

Christiansfeld 30 basin details:

Simple and elegant wash basin in matte white solid Acovi® composite with integrated waste. The wash basin can be table top or wall mounted. The basin can be ordered in your own measurements and design.