Copenhagen Bath
Bækkeskovvej
DK-2665 Vallensbæk Strand
CVR: DK32648622
Telefon: (+45) 3696 0747
contact@copenhagenbath.com
www.copenhagenbath.com

Waste Push-open flat, Acovi

SKU: 40040006

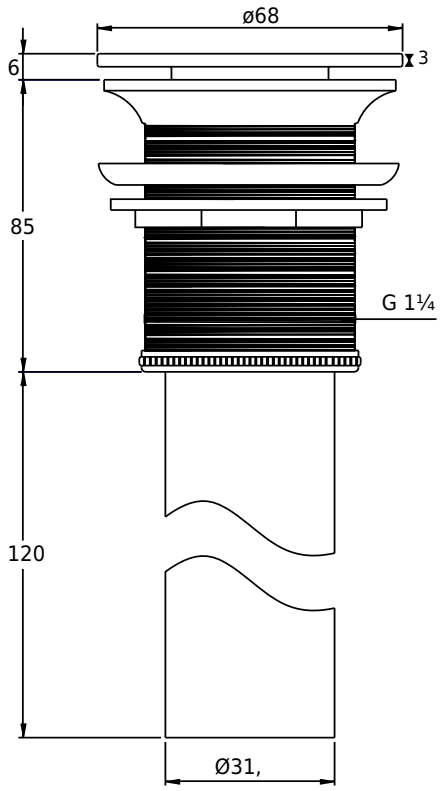

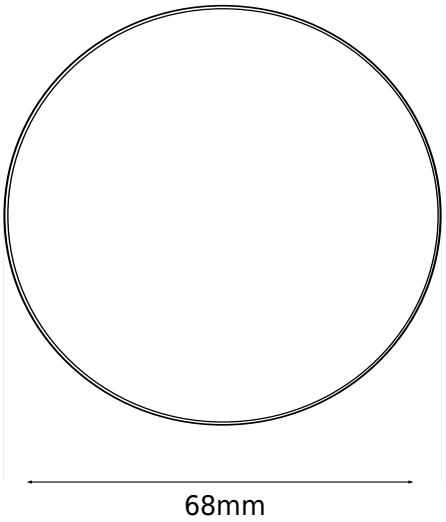

Colour:	Matte white
Size:	8.5cm / 6.8cm / 6.8cm
Weight:	0.31kg netto

Waste Push-open flat, Acovi details: