Copenhagen Bath
Bækkeskovvej
DK-2665 Vallensbæk Strand
CVR: DK32648622
Telefon: (+45) 3696 0747
contact@copenhagenbath.com
www.copenhagenbath.com

Romsø 120 left wash basin

SKU: 30040067

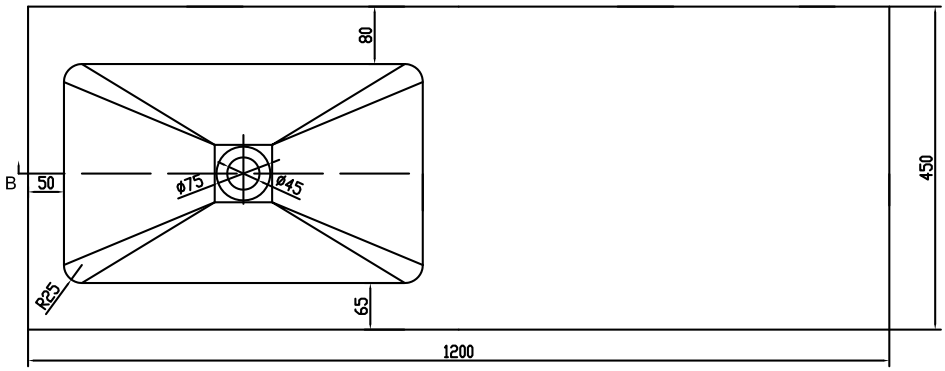

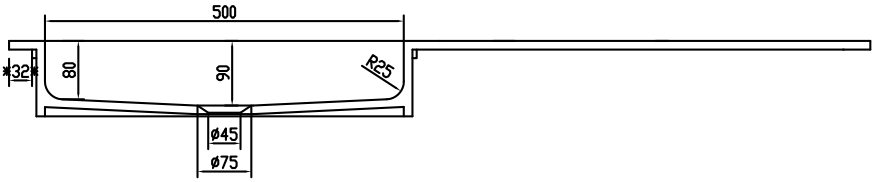

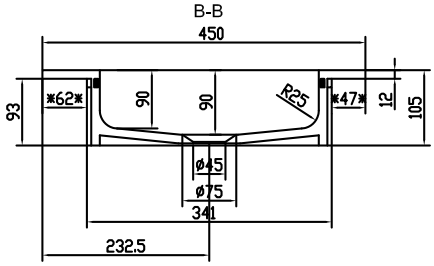

Colour:	Matte white
Size:	10.5cm / 120cm / 45cm
Weight:	16kg netto

Romsø 120 left wash basin details: