Copenhagen Bath
Bækkeskovvej
DK-2665 Vallensbæk Strand
CVR: DK32648622
Telefon: (+45) 3696 0747
contact@copenhagenbath.com
www.copenhagenbath.com

Larvik 160 Sound mirror

SKU: 30020217

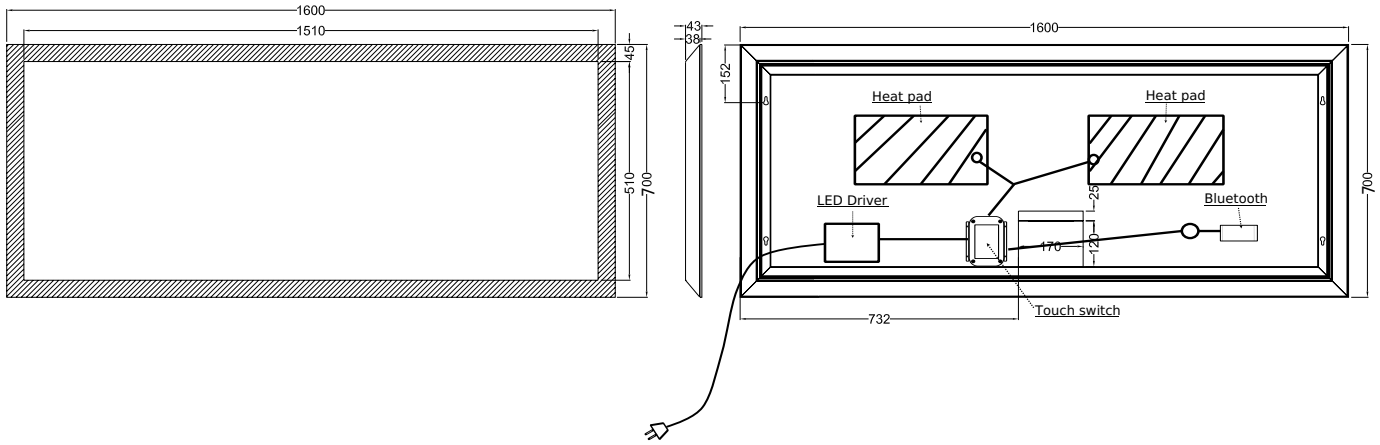

Colour:	Aluminium/glass
Size:	70cm / 160cm / 4.3cm
Weight:	17.3kg netto

Larvik 160 Sound mirror details: