Copenhagen Bath
Roskildevej 394
DK-2610 Rødovre
VAT no.: DK32648622
Phone: 02476468850
contact@copenhagenbath.co.uk
www.copenhagenbath.co.uk

Furesø 120 basin

SKU: 40010181

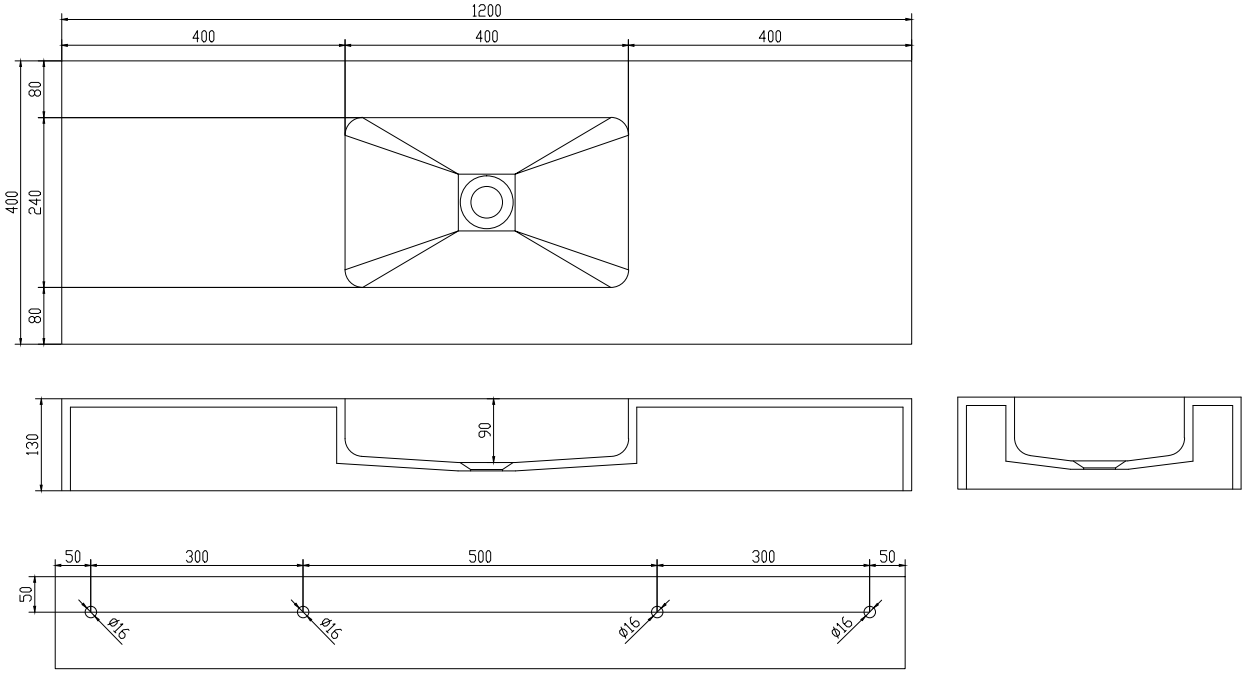

Colour:	Matte white
Size H/L/D:	13cm / 120cm / 40cm
Weight:	22.28kg net

Furesø 120 basin details:

Furesø 120 wash basin with sharp corners and edges on the outside and rounded corners and edges on the inside which makes it very easy to maintain. The wash basin is made of 100% Acovi solid surface. Can be ordered in different sizes.