Copenhagen Bath
Roskildevej 394
DK-2610 Rødovre
VAT no.: DK32648622
Phone: 02476468850
contact@copenhagenbath.co.uk
www.copenhagenbath.co.uk

Nexø 160 cabinet with double basin

SKU: 30010112

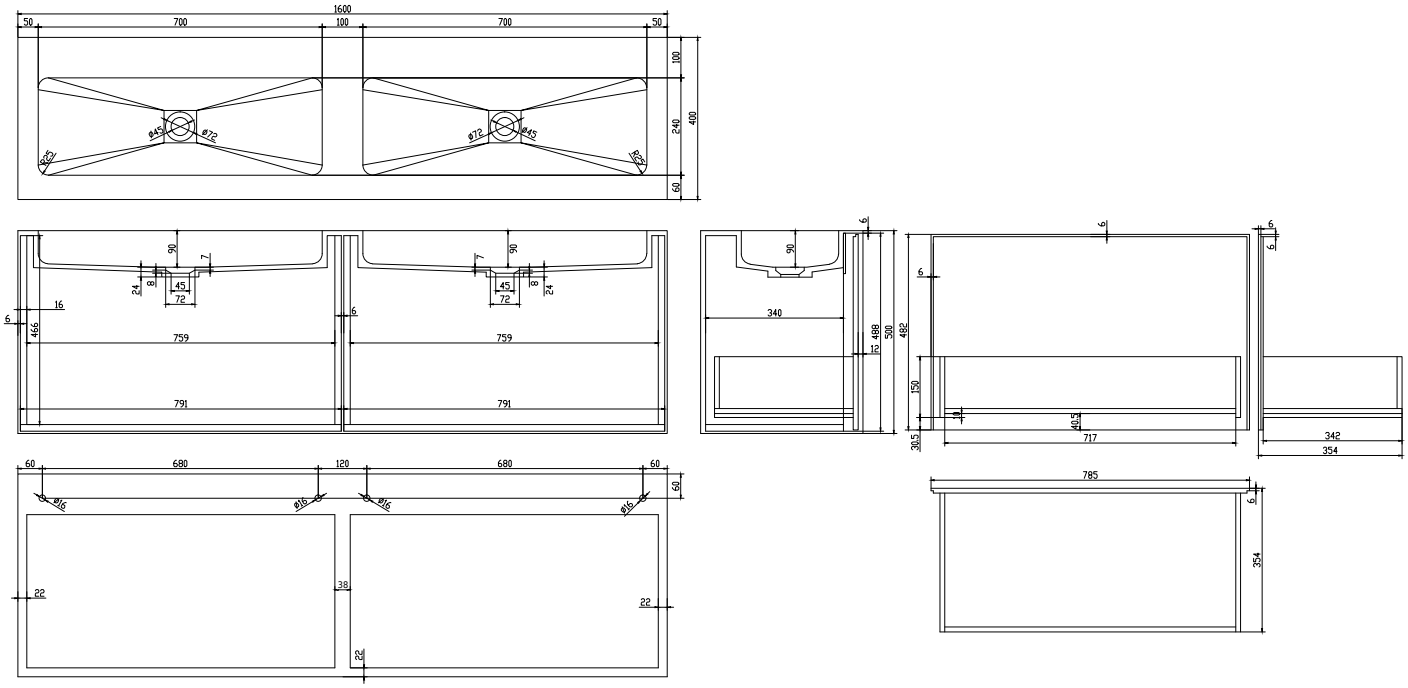

Colour:	Matte white
Size H/L/D:	50cm / 160cm / 40cm
Weight:	100kg net

Nexø 160 cabinet with double basin details: