Copenhagen Bath
Roskildevej 394
DK-2610 Rødovre
VAT no.: DK32648622
Phone: 02476468850
contact@copenhagenbath.co.uk
www.copenhagenbath.co.uk

Yuno CA 80 basin

SKU: 40010217

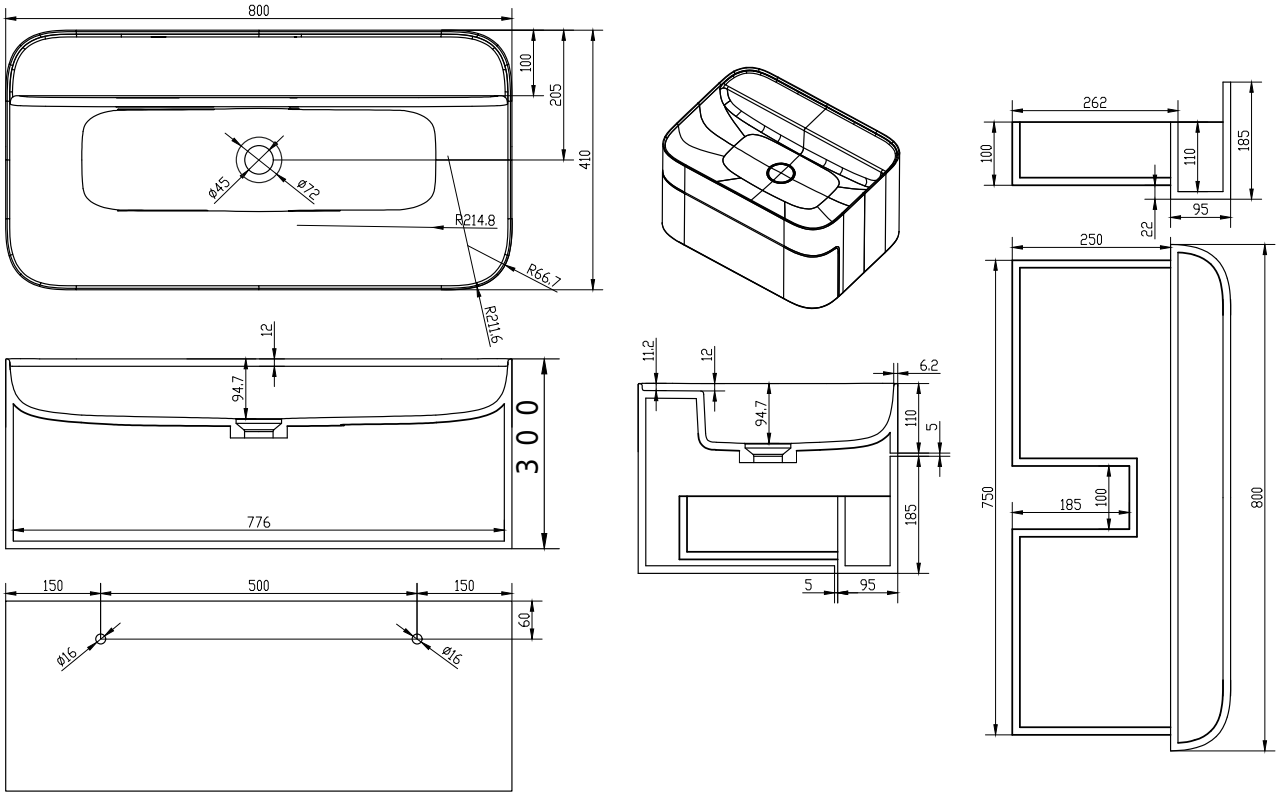

Colour:	Matte white
Size H/L/D:	30cm / 80cm / 41cm
Weight:	37kg net

Yuno CA 80 basin details:

Award winning designer duo Yuno has designed a brand new series of wash basins for Copenhagen Bath. With its Scandinavian minimalism and timeless design, it is already a classic. The soft rounded corners and an inner smooth design, stands in beautiful contrast to the outer sharp and straight edges, and makes the series both aesthetic and practical, which characterize good design. The Yuno series in matte white Acovi® composite, include wall mounted wash basins with drawer (CA) and without drawer (WA), and also a table mounted model (TA). Acovi® composite is ideal for bathrooms, since it is completely pore-free, and the smooth designed bowl makes it extremely easy to maintain. Using a waste offered in the same material as the wash basin, gives the wash basin its final touch.