Copenhagen Bath
Roskildevej 394
DK-2610 Rødovre
VAT no.: DK32648622
Phone: 02476468850
contact@copenhagenbath.co.uk
www.copenhagenbath.co.uk

Stavanger basin

SKU: 40010090

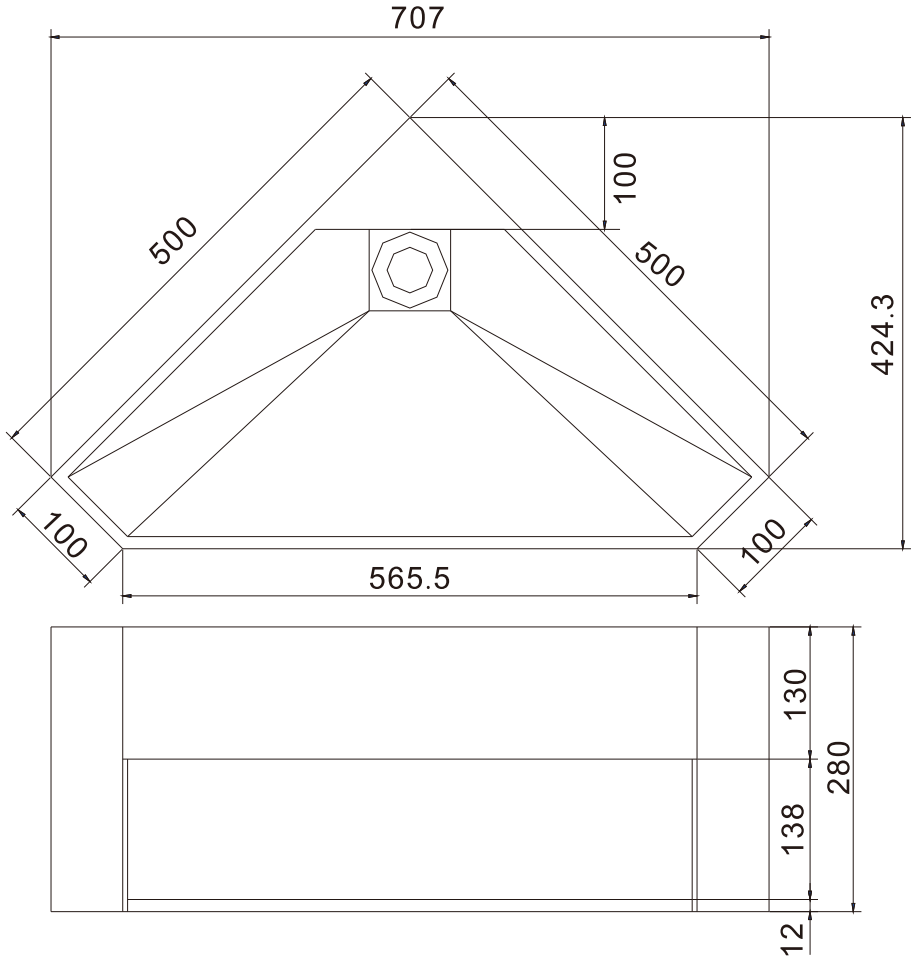

Colour:	Matte white
Size H/L/D:	28cm / 50cm / 50cm
Weight:	18kg net

Stavanger basin details:

A practical little corner wash basin in solid Acovi composite, suitable for small bathrooms. It is possible to deliver this wash basin made-to-measure. There will be a longer delivery time for bespoke products. Contact your nearest showroom for further details.