Copenhagen Bath
Roskildevej 394
DK-2610 Rødovre
VAT no.: DK32648622
Phone: 02476468850
contact@copenhagenbath.co.uk
www.copenhagenbath.co.uk

Fredensborg large bathtub

SKU: 40030020

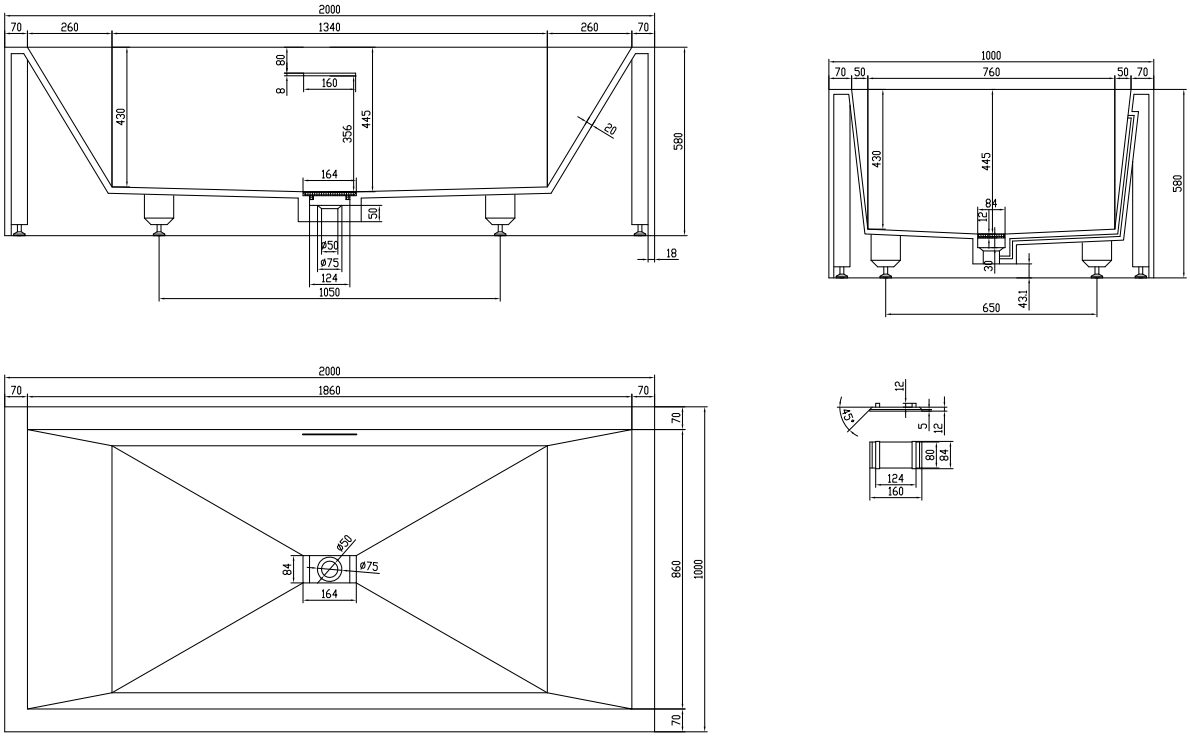

Colour:	Matte white
Litre:	380 overflow
Size H/L/D:	58cm / 200cm / 100cm
Weight:	250kg netto

Fredensborg large bathtub details:

Large freestanding bathtub from the Fredensborg series, made with slightly rounded corners for easy cleaning. The bathub is made from matte solid Acovi® composite which is ideal for bathrooms, since it is completely pore-free and is extremely easy to maintain. This has to be ordered as bespoke product. For stock item we have it in size H/L/W 58/180/80cm.