Copenhagen Bath
Bækkeskovvej
DK-2665 Vallensbæk Strand
CVR: DK32648622
Telefon: (+45) 3696 0747
contact@copenhagenbath.com
www.copenhagenbath.com

Nexø 160 cabinet with right basin

SKU: 30010115

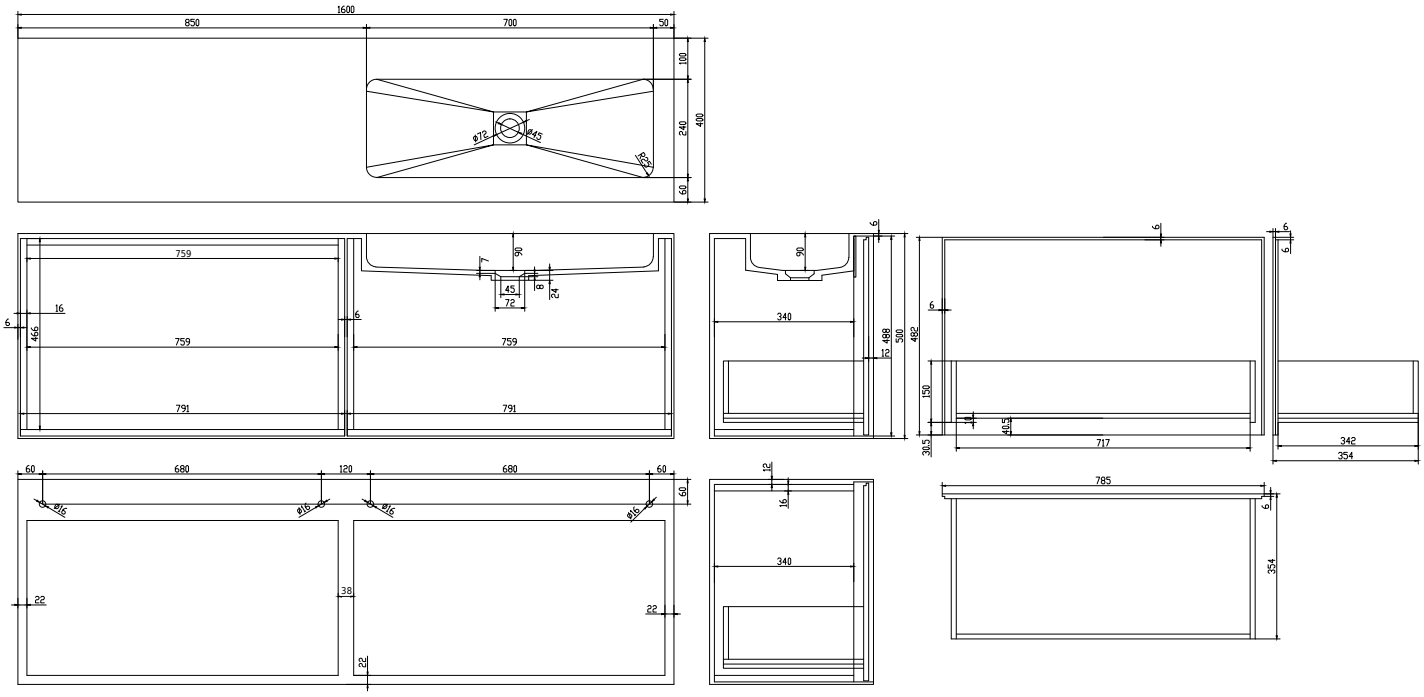

Colour:	Matte white
Size:	50cm / 160cm / 40cm
Weight:	78kg net

Nexø 160 cabinet with right basin details: