Copenhagen Bath
Bækkeskovvej
DK-2665 Vallensbæk Strand
CVR: DK32648622
Telefon: (+45) 3696 0747
contact@copenhagenbath.com
www.copenhagenbath.com

Yuno WA 80 basin

SKU: 40010224

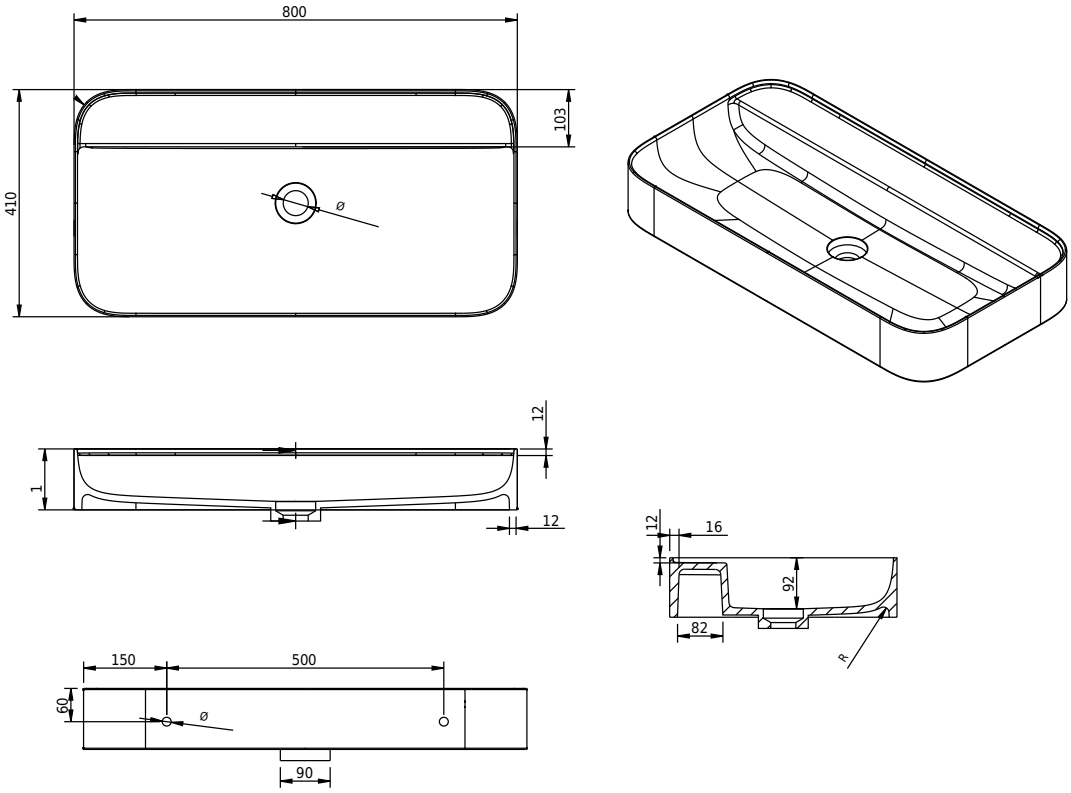

Colour:	Matte white
Size:	11cm / 80cm / 41cm
Weight:	15kg net

Yuno WA 80 basin details: