Copenhagen Bath
Bækkeskovvej
DK-2665 Vallensbæk Strand
CVR: DK32648622
Telefon: (+45) 3696 0747
contact@copenhagenbath.com
www.copenhagenbath.com

Sandfjord 50 left basin

SKU: 40010047

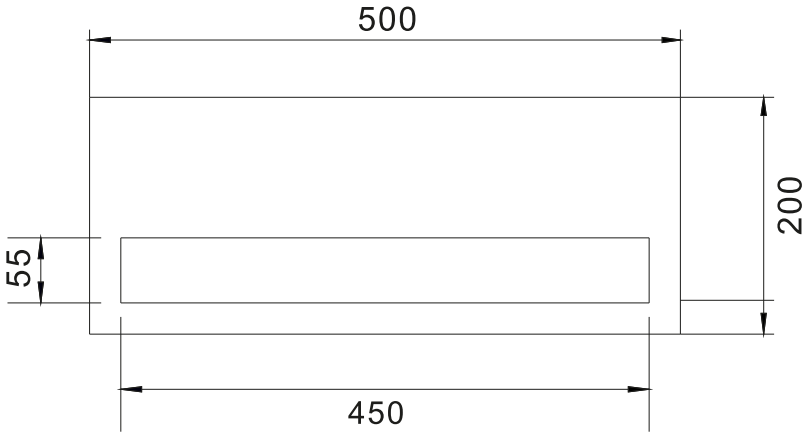

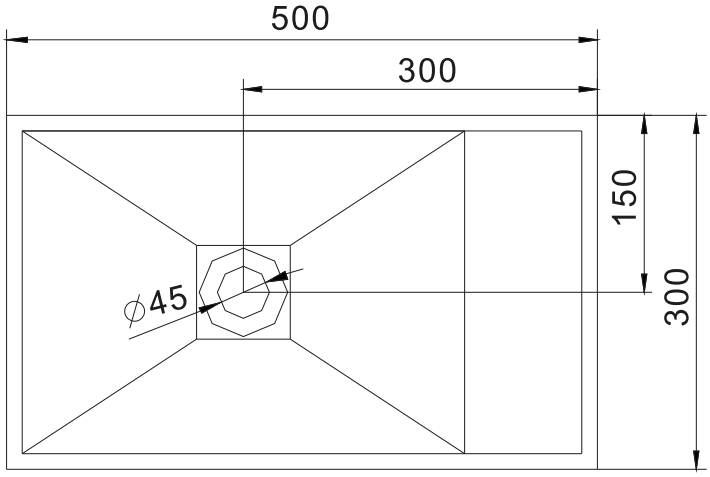

Colour:	Matte white
Size:	20cm / 50cm / 30cm
Weight:	9.78kg net

Sandfjord 50 left basin details: