Copenhagen Bath
Bækkeskovvej
DK-2665 Vallensbæk Strand
CVR: DK32648622
Telefon: (+45) 3696 0747
contact@copenhagenbath.com
www.copenhagenbath.com

Oslo 80 right basin with shelf

SKU: 40010347

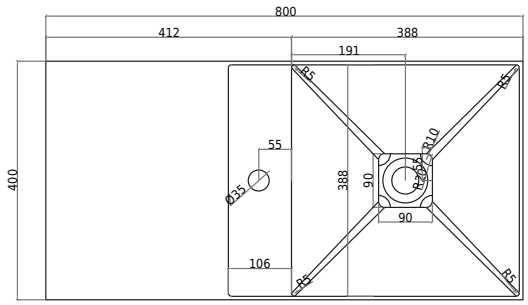

TOPVIEW

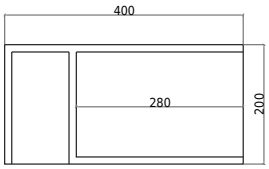

SECTION C-C

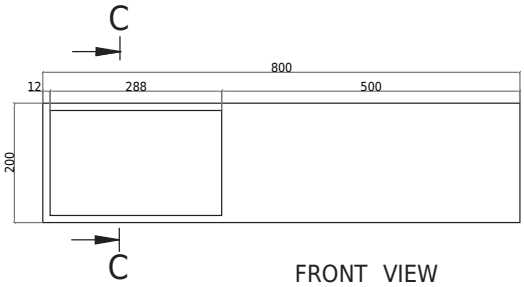

FRONT VIEW

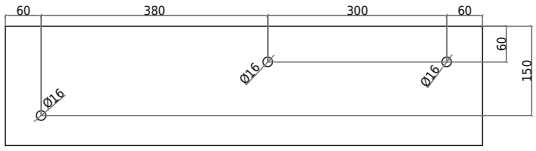

REAR VIEW

Colour:

Size: 20cm / 80cm / 40cm

Weight: 21kg net

Oslo 80 right basin with shelf details: