Copenhagen Bath
Roskildevej 394
DK-2610 Rødovre
ALV no.: DK32648622
IBAN: DK8190774584517404
Swift: SPNODK22
contact@copenhagenbath.com
www.copenhagenbath.com

Larvik 160 Sound peili

SKU: 30020217

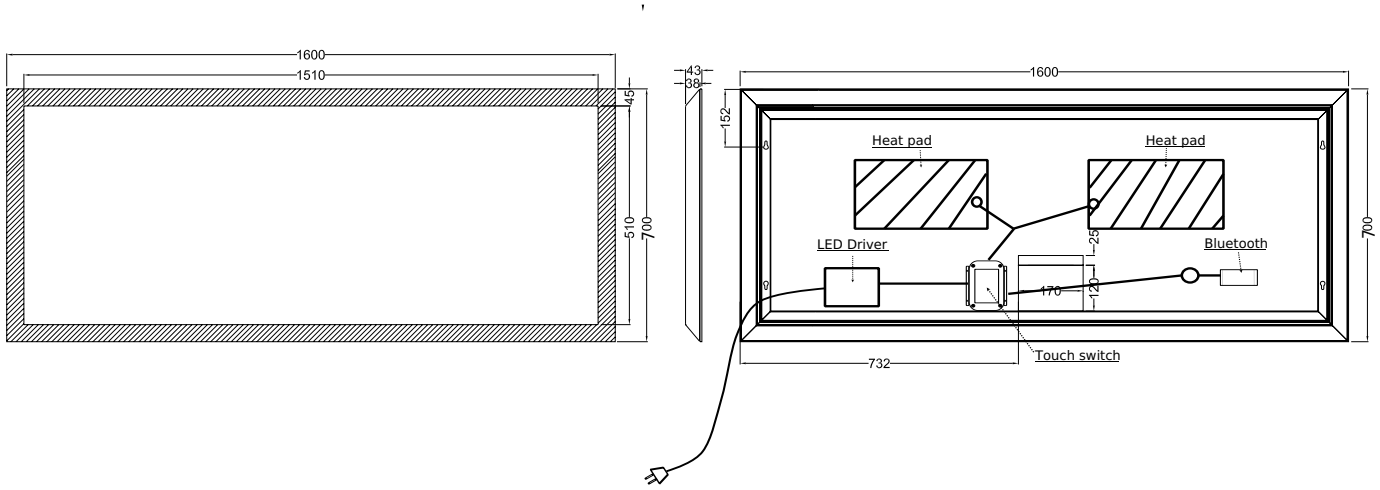

Väri:	Alumiini/Lasi
Koko K/P/S:	70cm / 160cm / 4.3cm
Weight:	17.3kg netto

Larvik 160 Sound peili tiedot:

The new improved sound gives the Larvik mirror a solid bass and a clear treble. Connect your phone or tablet wireless via Bluetooth to the mirror and enjoy your favourite music or podcasts while spending time in the bathroom. The cabinet is matte white powder-coated aluminium with a 45mm LED frame. The light can be regulated in colour and in brightness. The integrated demister pad heats the mirror to a few degrees above room temperature within 2-3 minutes to prevent the mirror from misting in even the steamiest of bathrooms.