Copenhagen Bath
Roskildevej 394
DK-2610 Rødovre
VAT no.: DK32648622
Phone: 02476468850
contact@copenhagenbath.co.uk
www.copenhagenbath.co.uk

Rosenborg bathtub

SKU: 40030035

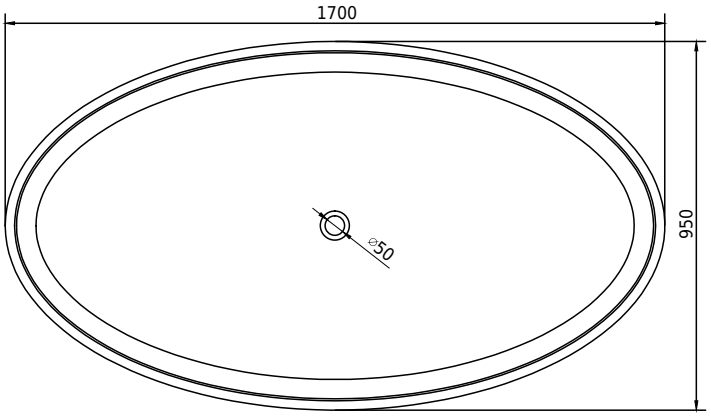

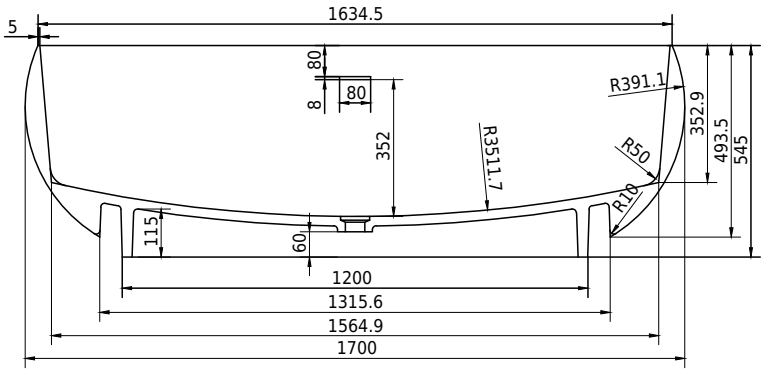

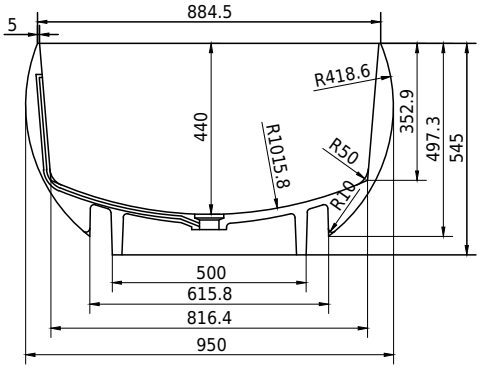

Colour:	Matte white
Litre:	340 overflow
Size H/L/D:	55cm / 170cm / 95cm
Weight:	185kg net

Rosenborg bathtub details:

Rosenborg bathtub is designed by Copenhagen Bath and is made of 100% Acovi solid surface.

Please note that there may be a tolerance of ± 5mm as all products are hand sanded.