Copenhagen Bath
Bækkeskovvej
DK-2665 Vallensbæk Strand
CVR: DK32648622
Telefon: (+45) 3696 0747
contact@copenhagenbath.com
www.copenhagenbath.com

Rosenborg bathtub

SKU: 40030035

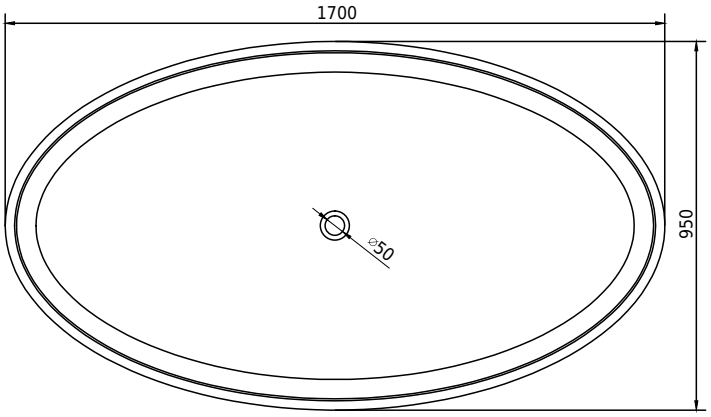

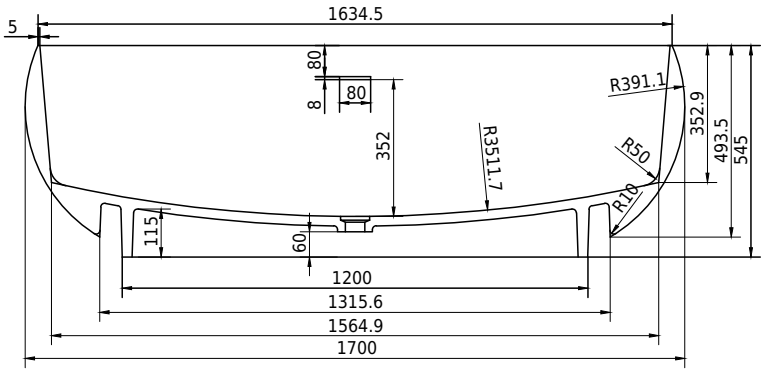

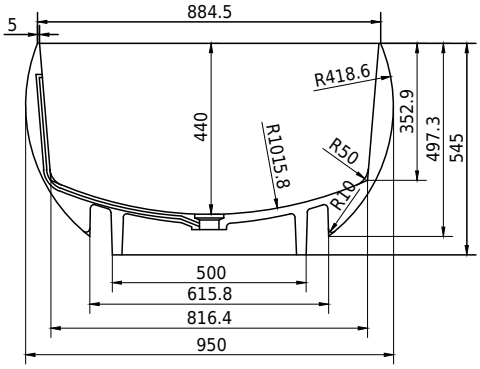

Colour:	Matte white
Litre:	340 overflow
Size:	55cm / 170cm / 95cm
Weight:	185kg net

Rosenborg bathtub details:

Please note that there may be a tolerance of ± 5mm as all products are hand sanded.