Copenhagen Bath
Roskildevej 394
DK-2610 Rødovre
VAT no.: DK32648622
Phone: 02476468850
contact@copenhagenbath.co.uk
www.copenhagenbath.co.uk

Fredensborg bathtub

SKU: 40030012

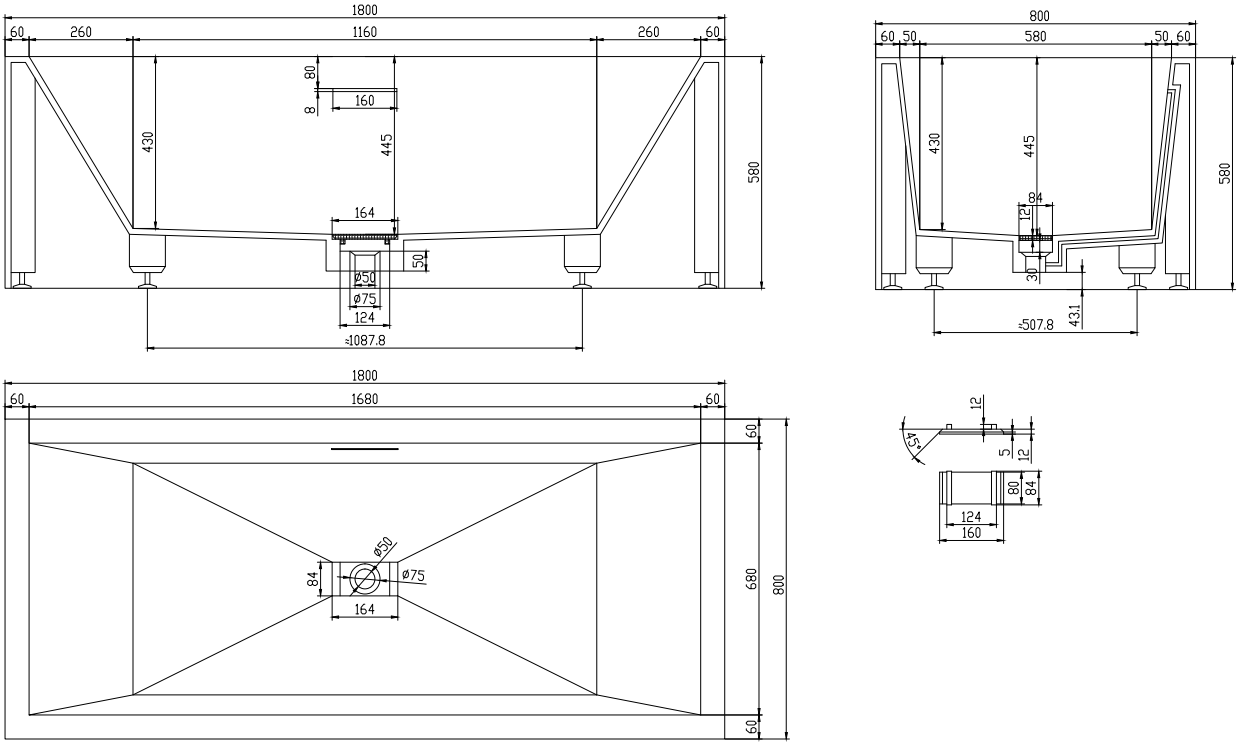

Colour:	Matte white
Litre:	290 overflow
Size H/L/D:	58cm / 180cm / 80cm
Weight:	195kg net

Fredensborg bathtub details:

Freestanding bathtub from the Fredensborg series, made with slightly rounded corners for easy cleaning. The bathtub is made from matte solid Acovi® composite which is ideal for bathrooms, since it is completely pore-free, and is extremely easy to maintain. Can also be ordered in the size H/L/W 58/200/100cm.

Please note that there may be a tolerance of ± 5mm as all products are hand sanded.